MCM 33X

Technical Specifications

Engine

Model	FAW XICHAI 4DW91-45
Type	Direct injection, water cooled
No. of Cylinders	4
Net Peak Power	33kW (45HP) @ 2300rpm
Fuel Tank Capacity	65 Litres
Vehicle Speeds	18-28km/h

Hydraulic System

Circuit Type	Open centre, gear type
Pump Capacity	58 L/min
System Pressure	18-20 Mpa
Steering Type	Hydraulic
Power Steering	Yes

Overall Dimensions

Overall Length	6000mm
Overall Height	2770mm
Overall Width	1680mm
Stabilizers Extended Width	2600mm
Wheel Base	1860mm
Front Axle to Bucket Edge	1895mm
Backhoe Reach from Rear Axle	4300mm

Operation Parameters

Operation Weight	3800kg

Backhoe Parameters	
Backhoe Bucket Capacity	0.1m³
Max. Digging Depth	2638mm
Max. Digging Height	3930mm
Max. Digging Radius	3630mm
Rotation Angle of Boom	190°
Loader Parameters	
Loader Bucket Capacity	0.6m³
Rated Loading Weight	1000kg
Max. Lift Height	3400mm
Max. Dumping Height	2200mm
Dumping Distance	1300mm
Min. Turning Distance	3000mm
Bucket Breakout Force	42kN

Under our policy of continuous improvement, we reserve the right to change technical data and design without prior notice.

Attachments

Quick Hitches, Buckets, Grapples, Hydraulic Breakers, Augers, Thumbs, Rippers, Rakes, Compactors and more..

Diagram

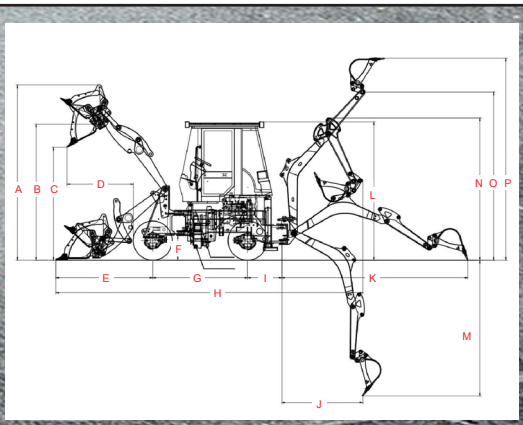

A	3406mm
B	2643mm
C	2194mm
D	1295mm
E	1894mm
F	476mm
G	1851mm
H	5995mm
I	671mm
J	1578mm
K	3633mm
L	2686mm
M	2638mm
N	2763mm
O	3266mm
P	3926mm